Vertical Basket Press

Following the principles of one of the oldest grape pressing methods, the SRAML vertical basket presses support the most delicate treatment of the grape to achieve premium sparkling and still wines.

Upgraded with outstanding automatic systems for a completely controlled gentle pressing during the entire process, the SRAML BP vertical basket press prevents any shredding and grinding effect on fresh or sensitive fermented skins, avoiding the release of bitter, herbaceous substances and astringent characteristics from the seeds, skins and stems.

Designed for easy displacement of the pomace cake and cleaning, the **SRAML BP hydraulic basket presses** allow winemakers the flexibility to adjust or standardize pressure steps to obtain the highest quality press juice.

Vertical Basket Press features include:

- Clear juice or must extraction with low content of suspended solids
- No pomace cake break-up
- Easy-to-use touchscreen HMI with programmable pressing parameters
- Uniform pressure distribution
- Pressing operation executed in a single cycle with a slow increase in pressure
- Maintaining grape skin integrity by protecting the skin and seeds from being triturated or crushed
- Special lifting system for easy removal of the pomace cake
- Simple cleaning and hygiene maintenance

Product specifications

Main features

- The grape is loaded into the stainless-steel basket and pressed against the bottom surface by the upper plate by means of a hydraulic system. Juice outflows through the slots on the basket and drainage channels on the upper and bottom pressing plate, being drained into the collection tray under the press.
- Gently presses whole grapes, grape mash and fermenting mash, avoiding any damage to the skins, seeds and stems
- Easy-to-use touchscreen HMI with programmable pressing parameters: 8 pre-installed programmes and 8 free channels for individual programming
- Special lifting system to easily remove the pomace cake from the basket
- Steel framework is painted in food grade colour while the parts in contact with the product are made from stainless steel and non-toxic material
- No adsorption of the colouring matter on suspended solids
- Easy to use, clean and maintain

Options

Models BP9, BP12 and BP23

- Drainage discs (synthetic material)
- Additional basket with juice collection tray

Technical data

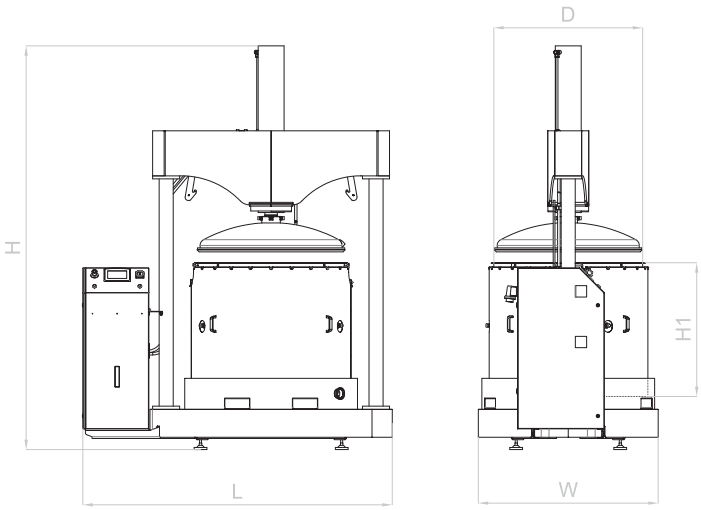

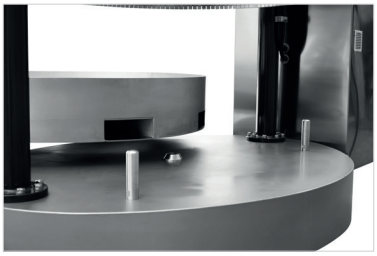

		BP9	BP12	BP23
Basket volume	L	900	1200	2300
Basket dimensions (diameter × height) D x H1	mm	⌀ 1070 × 1000	⌀ 1200 × 1000	⌀ 1700 x 1050
Length x Width x Height L × W × H	mm	1460 × 2510 × 3270	1460 × 2510 × 3270	1960 x 3150 x 3430
Transport height	mm	2620 (2350*)	2620 (2350*)	2770
Weight	kg	2300	2300	3200
System working pressure	bar	250		
Surface pressure	bar	7,0	5,5	5,5
Installed power	kW	3		
Supply voltage		3/N/PE ~ 400/230 V 50 Hz		

* Without basket

Images are shown for illustrative purposes only. While we try to make sure that product information posted here is accurate at all times, we are not responsible for typographical and other errors that may appear in the content. ®All rights reserved.

processing machinery

Šraml d.o.o.
Podnanos 66b
SI-5272 Podnanos
Slovenia
VAT: SI 77762614

E info@sraml.com
T +386 5 368 6116
www.sraml.com

SCAN TO WATCH